Kinematic Center Mirror Mount | MHI

RoHS Catalog Code W4102

Application Systems
Optics & Optical Coatings
Opto-Mechanics
Bases
Manual Stages
Actuators & Adjusters
Motoeized Stages
Light Sources & Laser Safety
Index
Guide
Mirrors
Lenses
Prisms
Polarizers
Lasers
Beam Shaping Diffusers
Filters
Shutter
Others
Fiber

The Kinematic Center Mount is designed to allow the mirror to be loaded from the rear, keeping the reflective front surface centered above the mounting hole.

- When this mount is rotated 45 degrees on an optical bench, the center of mirror will stay at the optical axis.
- Cutouts and bevels allow these to be used as beamsplitter holders and not interfere with the transmitted beam.
- Building the mirror frame into the support of the holder keeps the mount thin with a small footprint.
- The small footprint allows more room to access the adjusters compared to regular kinematic mirror holders.
- Includes alighnment pin holes to accurately place mount in OEM instruments(ϕ3H7 except MHI-12.7, which is ϕ2H7).

Guide

- Vertical control gimbal mirror and beamsplitter holders (BSHL) where the rotation of the fine adjustment matches the mirror center are also available. Reference C022
- Can be mounted using an M4 low head screw to secure them from the top or an M6 threaded post from the bottom. (MHI-12.7 can be mounted with an M3 low head screw from the top and M4 threaded post from the bottom.)

Attention

- MHI-12.7 limits the tilt and rotation to be ±1° and ±2° respectively, even when a low and small head hexagon socket head cap screw is used.
- When securing a mirror with a low head hexagon socket head cap screw, a hex wrench may interfere with the mirror. Please retract the mirror by turning the rotation and tilt adjustment screws before tightening the low head hexagon socket head cap screw.
- When securing a mirror on a baseplate with a M4 low head hexagon socket head cap screw, there will be ±1mm clearance.

2D CAD 3D CAD

Outline Drawing

MHI-12.7 Low head hexagon socket head cap screw M3×6…1 screw

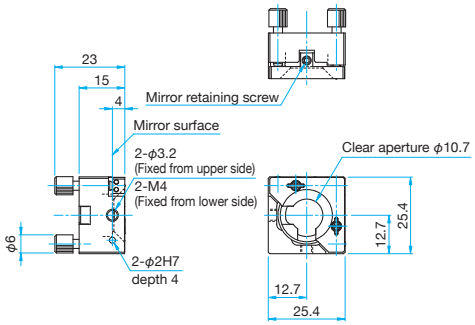

MHI-25.4/30 Low head hexagon socket head cap screw M4×8…1 screw

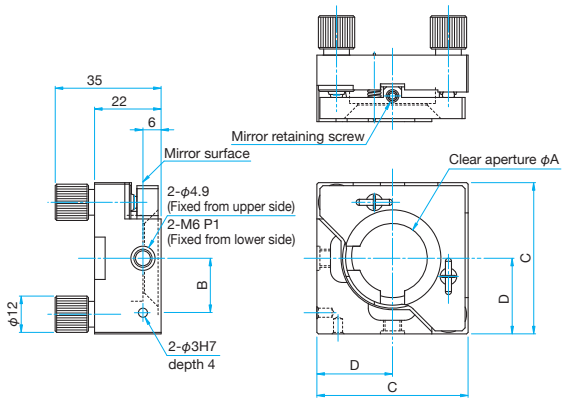

Part Number	B (mm)	C (mm)	D (mm)
MHI-25.4	18	50	25
MHI-30	20	55	27.5

Cross-section view of MHI-30

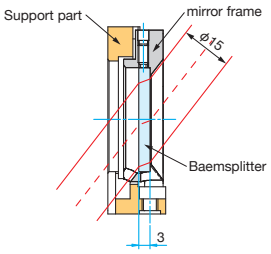

Specifications

Primary material: Aluminum (Brass only for MHI-12.7)
Finish: Black Anodized (Chrome only for MHI-12.7)

Part Number	Options specified*1	Compatible Optics Diameter [mm]	Compatible Optics Thickness [mm]	Clear aperture ϕA [mm]	Reflected Beam Clear Aperture (45°incidence) [mm]	Transmitted Beam Clear Aperture (45°incidence)*2 [mm]	Adjustment Range Tilt [°]	Adjustment Range Rotation [°]	Resolution Tilt [°/rotation]	Resolution Rotation [°/rotation]	Weight [kg]
MHI-12.7	—	ϕ12.7	2 – 9	ϕ10.7	ϕ6.8	ϕ5	±3	±3	about 0.74	about 0.74	0.05
MHI-25.4	UU	ϕ25, ϕ25.4	3 – 10	ϕ23	ϕ15.5	ϕ13	±1.5	±1.5	about 0.4	about 0.4	0.12
MHI-30	UU	ϕ30	3 – 10	ϕ27	ϕ18.3	ϕ15	±1.5	±1.5	about 0.35	about 0.35	0.13

*1 For specifying options, please refer to "Conversion of Posts, Post Holders and Pedestal Bases of Holders". Reference C007
*2 When light is transmitted through a BK7 plane parallel substrate of 3mm thickness.