# Angled Micrometer Heads | MDC

RoHS Catalog Code W8006

Application Systems
Optics & Optical Coatings
Opto-Mechanics
Bases
Manual Stages
Actuators & Adjusters
Motoeized Stages
Light Sources & Laser Safety
Index
Micrometer Heads
Differential Micrometer Heads
Fine-pitch Screws
Remote
PKA
ACT

**Unique right angle drives are direct replacements for micrometer heads used on OptoSisgma's manual stages. Unidirectional control units are suitable for assembly into systems, offering excellent operability in confined spaces and improving work efficiency.**

- Compatible with the mounting brackets of micrometer heads used in products listed in the catalog.
- Angled micrometer heads can be rotated and secured at any position. Adjust to the most convenient position depending on the situation.

Example of mounting onto stage

## Guide

- Angled micrometer heads will be assembled onto a stage when purchased together. Contact the Sales Division if you need a certain orientation.
- The feed rate at the end of the micrometer is not 1:1, but is slightly less. The scale on the micrometer should be used as an estimate.

## Attention

- Depending on the stage type and installation angle of the micrometer head, there can be shortened travel or interference with mounting parts. Contact our Sales Division when you swap the micrometer head.
- MDC-6.5 requires a special nut driver (MNS). Contact our Sales Division for more information.

2D CAD 3D CAD

## Outline Drawing

### MDC-6.5

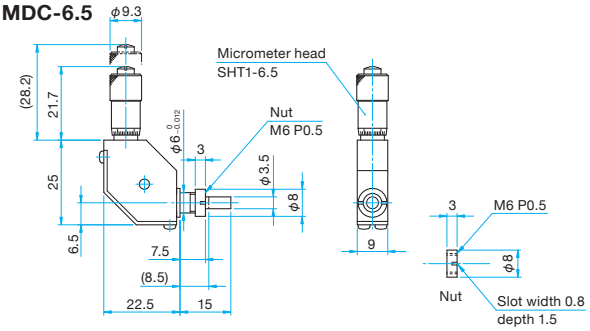


### MDC-6.5R

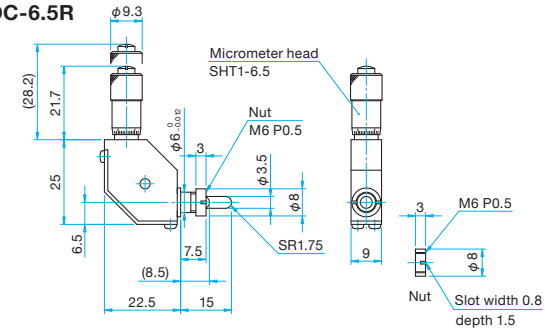


### MDC-13

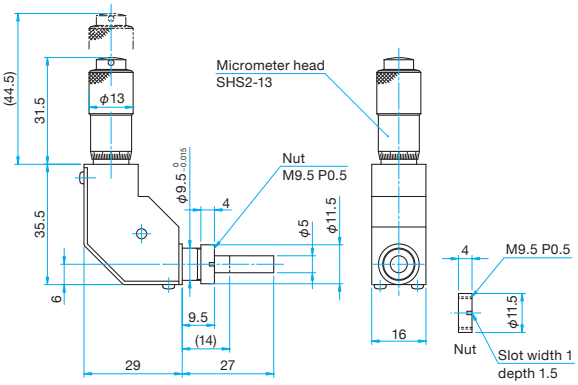


### MDC-13R

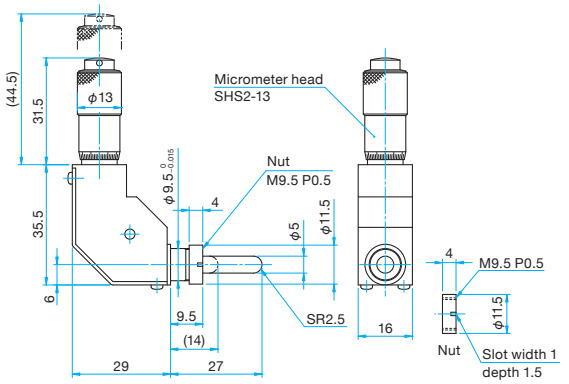


## Specifications

| Part Number | Travel [mm] | Readable Resolution [mm] | Lead of Actuator [mm] | Load Capacity (Static load) [N] | Tip Shape | Weight [kg] |
|---|---|---|---|---|---|---|
| **MDC-6.5** | 0 – 6.5 | 0.01 | 0.5 | 29.4 (3kgf) | Flat type | 0.03 |
| **MDC-6.5R** | 0 – 6.5 | 0.01 | 0.5 | 29.4 (3kgf) | R type | 0.03 |
| **MDC-13** | 0 – 13 | 0.01 | 0.5 | 39.2 (4kgf) | Flat type | 0.07 |
| **MDC-13R** | 0 – 13 | 0.01 | 0.5 | 39.2 (4kgf) | R type | 0.07 |